QUANSER
INNOVATE·EDUCATE

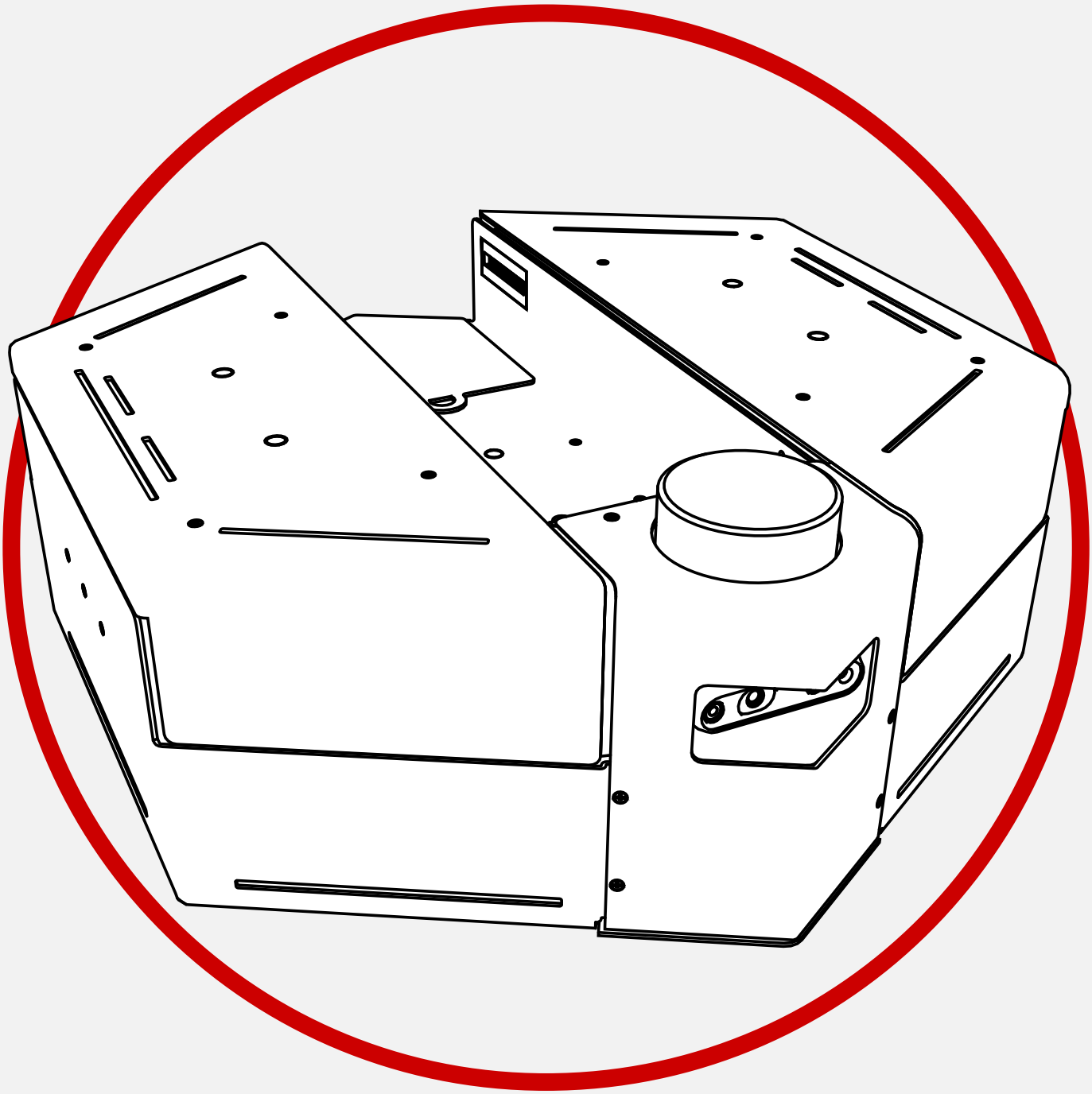

Mobile Robotics Lab

Welcome Guide

© 2024 Quanser Inc., All rights reserved.

Quanser Inc.
119 Spy Court
Markham, Ontario
L3R 5H6
Canada

info@quanser.com
Phone: 19059403575
Fax: 19059403576
Printed in Markham, Ontario.

For more information on the solutions Quanser Inc. offers, please visit the web site at:
http://www.quanser.com

This document and the software described in it are provided subject to a license agreement. Neither the software nor this document may be used or copied except as specified under the terms of that license agreement. Quanser Inc. grants the following rights: a) The right to reproduce the work, to incorporate the work into one or more collections, and to reproduce the work as incorporated in the collections, b) to create and reproduce adaptations provided reasonable steps are taken to clearly identify the changes that were made to the original work, c) to distribute and publicly perform the work including as incorporated in collections, and d) to distribute and publicly perform adaptations. The above rights may be exercised in all media and formats whether now known or hereafter devised. These rights are granted subject to and limited by the following restrictions: a) You may not exercise any of the rights granted to You in above in any manner that is primarily intended for or directed toward commercial advantage or private monetary compensation, and b) You must keep intact all copyright notices for the Work and provide the name Quanser Inc. for attribution. These restrictions may not be waved without express prior written permission of Quanser Inc.

Mobile Robotics Lab

Welcome Guide

Welcome to the Mobile Robotics Lab

Before getting started with the provided content, please read this guide to get an overview of the Mobile Robotics Lab content package. Quanser's Mobile Robotics Lab contains curriculum designed to get students familiar with topics related to mobile robotics. Topics are intuitively subcategorized as skills progressions, and further into labs for convenience.

This equipment is designed to be used for educational and research purposes. The user is responsible for ensuring that the equipment will be used by or used under supervision by **technically qualified personnel only**.

A. Software Pre-Requisites

Before you begin running any of the labs, make sure that the following has been installed on the development Windows PC or laptop (macOS and Linux not supported):

1. You have installed necessary software.
   - Simulink with Hardware (with or without virtual experiments)

     - install MATLAB Simulink and QUARC as described in the QUARC Quick Installation Guide https://download.quanser.com/doc/latest/QUARC_Quick_Installation_Guide.pdf

   - Simulink with Virtual labs (with or without Python use)

     - install a version of MATLAB Simulink compatible with the Quanser Interactive Labs MATLAB Add-on https://www.mathworks.com/matlabcentral/fileexchange/123860-quanser-interactive-labs-for-matlab

     - install Quanser Interactive Labs for MATLAB using the Add-on Manager in MATLAB

   - Python with Hardware (with or without virtual experiments)

     - Python 3.11+

     - if QUARC was not installed (as it's only needed if using MATLAB Simulink), install the Quanser SDK for Windows. https://github.com/quanser/quanser_sdk_win64

   - Python with ONLY Virtual labs

     - Python 3.11+

     - install both Quanser Interactive Labs and the Quanser SDK for Windows as described in https://qlabs.quanserdocs.com/en/latest/Get%20Started.html#installation-set-up

2. The provided Mobile Robotics content zip has been extracted and installed **and your development laptop/PC** ***was restarted after***.

B. QBot Platform Driver

All content involving the physical QBot Platforms requires you to run the qbot_platform_driver.rt* file on the QBot platform. The driver provides the hardware interface that accepts velocity commands and broadcasts sensor data for inertial and motor sensors (tach, encoder, current sense etc.). All user applications (in Python or MATLAB/Simulink) interface with the driver application. Additionally, the user applications interface directly with the LiDAR, cameras, joystick, etc. Running user applications without the driver will result in no motion or a failure to run the user application altogether.

	Hardware	Virtual
Python	The driver application must be transferred to the QBot along with the user application. Running the user application will **automatically deploy** the driver for you.	Virtual QBot platform's driver is **automatically deployed** by the user application's qlabs_setup.py script, which in turn is called by the user application.
MATLAB/Simulink	Right-click the driver application and use the **Run on Target** menu to **manually deploy** the driver.	Virtual QBot platform's driver is **automatically deployed** by the user application's qlabs_setup.m script.

For more information on this, check out the Software User Manuals for MATLAB/Simulink and Python.

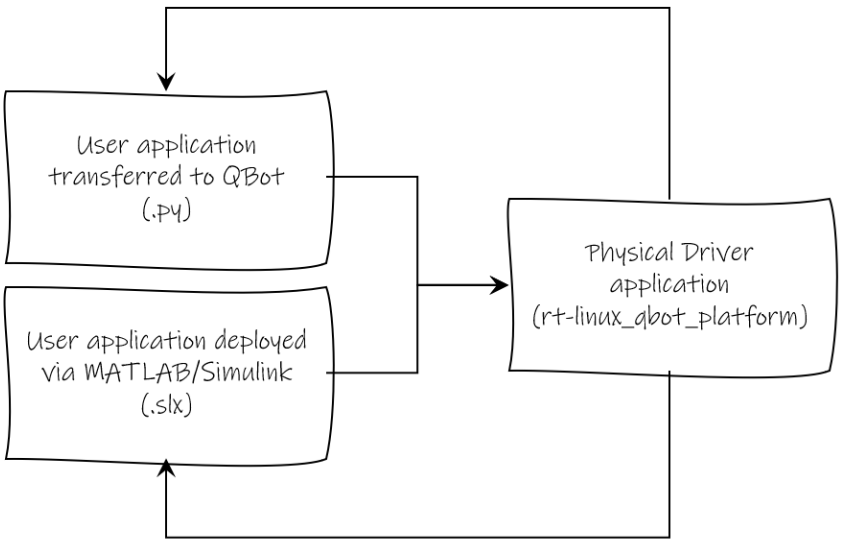

C. Getting Started

1. Review the User Manuals under the `Documents/Quanser/user_manuals` directory for `qbot_platform`.

   These will guide you on how to charger batteries, connect to QBots, turn the QBots on, and use various software interfaces.

2. Run the Quick Start examples in your language of choice from the `Documents/Quanser/quick_start_guides` directory for `qbot_platform`.

3. As a researcher or instructor, check out the examples provided under the `Documents/Quanser/examples/qbot_platform` directory.

4. As an instructor or student, check out the Mobile Robotics lab content under the `Documents/Quanser/Mobile_Robotics` directory.